WT901WIFI Product Specifications

Contents

1. Product Introduction 3

1.1. Product Overview 3

1.2. Features 4

1. Parameters 5

1.1. Accelerometer parameters 5

1.2. Gyroscope parameters 5

1.3. Magnetometer parameters 6

1.4. Pitch and roll angle parameters 6

1.5. Heading angle parameters 6

1.6. Module parameters 7

1.6.1. Basic parameters 7

1.6.2. Electrical parameters 8

2. Product size 9

3. Interface Description 9

4. Product Packaging 10

5. Application Areas 11

1.Product Introduction

1.1. Product Overview

- This product is a high-performance three-dimensional motion attitude measurement system based on MEMS technology. It contains motion sensors such as three-axis gyroscopes , three-axis accelerometers , and three-axis electronic compasses . By integrating various high-performance sensors and using the independently developed attitude dynamics core algorithm engine, combined with a high-dynamic Kalman filter fusion algorithm, it provides customers with high-precision, high-dynamic, and real-time compensated three-axis attitude angles, and meets different application scenarios through flexible selection and configuration of various types of data.

- The leading sensor fusion algorithm based on Kalman filtering principle and with independent intellectual property rights can provide real-time data with an update rate of up to 200Hz, thus meeting various high-precision application requirements and achieving accurate motion capture and posture estimation.

- We have the domestically leading high-precision turntable equipment and instruments, and our products integrate independently developed high-precision calibration and calibration algorithms to improve the measurement accuracy of our products.

- At the same time, we provide users with various host computers, instructions for use, and development manuals, so as to minimize the research and development time for various needs.

1.2. Features

- The module integrates high-precision gyroscopes, accelerometers, and geomagnetic field sensors, and uses high-performance microprocessors and advanced dynamics solvers and Kalman dynamic filtering algorithms to quickly solve the module's current real-time motion posture.
- The use of advanced digital filtering technology can effectively reduce measurement noise and improve measurement accuracy.
- The module integrates an attitude solver, which, in conjunction with the dynamic Kalman filter algorithm, can accurately output the current attitude of the module in a dynamic environment. The attitude measurement accuracy is 0.2°, the stability is extremely high, and the performance is even better than some professional inclinometers.
- The Z-axis heading angle is added with geomagnetic sensor filtering and fusion, which solves the cumulative error caused by the drift of gyroscope integration in the 6-axis algorithm, and can output heading angle data stably for a long time. **Note: Due to magnetic field detection, calibration is required before use, and it is necessary to stay at least 20cm away from magnetic interference areas, electronic equipment, magnets, speakers and other hard magnetic objects when using it.**

- The maximum data output rate is 200Hz. The output content can be selected arbitrarily, and the output rate is adjustable from 0.2 to 200Hz.
- Built-in 3.7V-260mAh lithium battery, working current 80mA, continuous working for 3 hours, charging time 1 hour
- 2.4G band WIFI signal, support TCP and UDP custom connection

1.Parameters

1.1. Accelerometer parameters

parameter	condition	Typical Value
Range		±16g
Resolution	±16g	0.0005(g/LSB)
RMS Noise	Bandwidth = 100 Hz	0.75~1mg-rms
Static Zero Drift	Horizontal placement	±20~40mg
Temperature Drift	-40°C ~ +85°C	±0.15mg/℃
bandwidth		5~256Hz

1.2. Gyroscope parameters

parameter	condition	Typical Value
Range		±2000°/s
Resolution	±2000°/s	0.061(°/s)/(LSB)

RMS Noise	Bandwidth = 100 Hz	0.028~0.07(°/s)-rms
Static Zero Drift	Horizontal placement	±0.5~1°/s
Temperature Drift	-40°C ~ +85°C	±0.005~0.015 (°/s)/℃
bandwidth		5~256Hz

1.3. Magnetometer parameters

parameter	condition	Typical Value
Range		±30Gauss
Resolution	±30Gauss	1mG/LSB

1.4. Pitch and roll angle parameters

parameter	condition	Typical Value
Range		X: ±180°
		Y: ±90°
Inclination accuracy		0.2°
Resolution	Horizontal placement	0.0055°
Temperature Drift	-40°C ~ +85°C	±0.5~1°

1.5. Heading angle parameters

parameter	condition	Typical Value
Range		Z: ±180°
Heading accuracy	9-axis algorithm, magnetic field calibration, dynamic/static	1° (without magnetic field interference) [1]
	6-axis algorithm, static	0.5° (dynamic integral cumulative error) 【2】
Resolution	Horizontal placement	0.0055°

Note:

【1】Please calibrate the magnetic field in the test environment before use to ensure that the sensor is familiar with the magnetic field in the environment. During calibration, please stay away from magnetic interference. 【2】In some vibration environments, there will be cumulative errors. The specific error cannot be estimated and will be determined based on actual tests.

1.6. Module parameters

1.6.1. Basic parameters

parameter	condition	Minimum	default	Maximum
Communication interface	UART		9600bps	

Transmission method		WIFI-2.4GHz frequency band, supports TCP/UDP communication		
Output		Device ID, on-chip time, 3-axis acceleration, 3-axis angular velocity, 3-axis magnetic field, 3-axis angle, temperature, power, signal, version		
Output rate		1Hz	10Hz	200Hz
Operating temperature		-20℃		70℃
Storage temperature		-20 ℃		70 ℃

1.6.2. Electrical parameters

parameter	condition	Minimum	default	Maximum
Charging voltage			5V(TypeC)	
Battery voltage		3.3V	3.7V	4.2V
Working current	200HZ		80mA	
Charging Current	5V(TypeC)		250mA	
Battery capacity			260mAh	

Working hours			3 hours	
Charging time			1 hour	

2.Product size

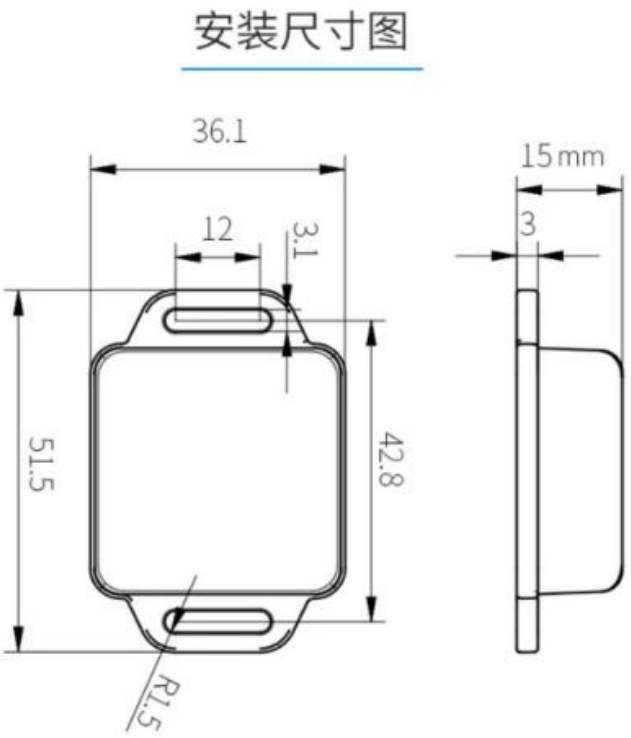

3.Interface Description

interface	Functional Description
switch	Power switch
button	Long press for 2 seconds to restore to factory settings, short press has no effect
Type C	Charging and serial port data printing

LED Light	Blue light is on: Connecting Blue light flashing: Connection successful Red light on: Charging Red light off: Fully charged

4. Product Packaging

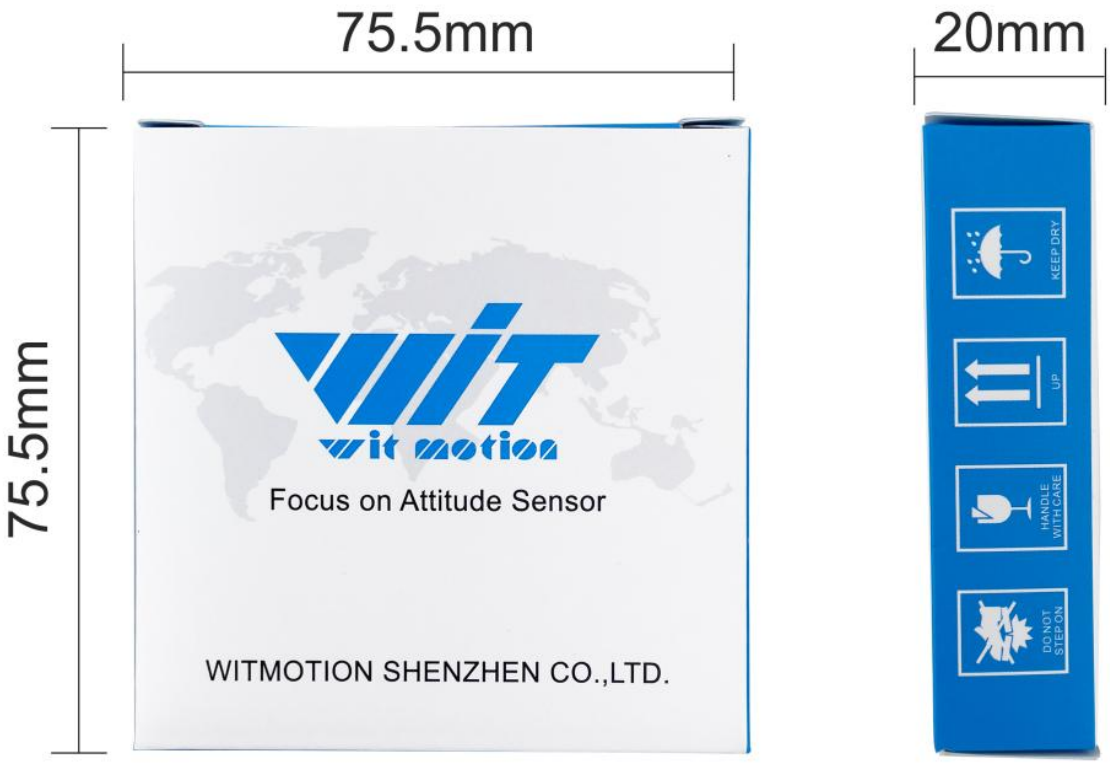

5.Application Areas
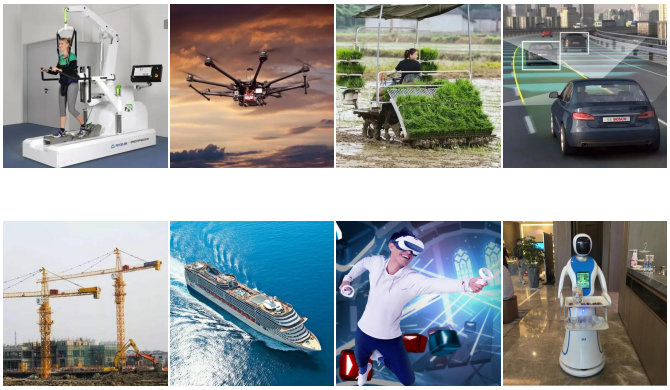
- Virtual reality/augmented reality, head mounted displays
- Large-scale agricultural automated farming
- Safety monitoring of aerial work
- UAV, manned aircraft
- Industrial posture monitoring
- Human motion tracking/capture
- Robots, Automated Guided Vehicles
- Pedestrian Navigation
- Autonomous driving/assisted driving
- Military, intelligent weapons and equipment